10770009

INDEX

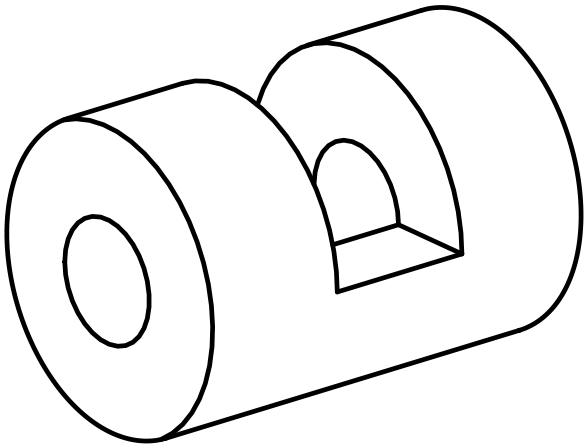

Clamping sleeve

10770009

INDEX

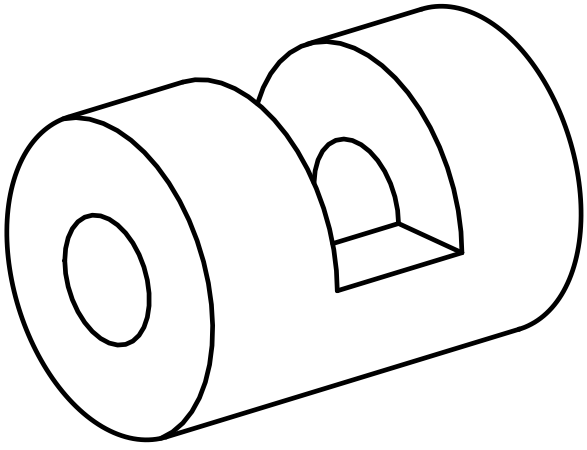

Clamping sleeve