10724630

INDEX

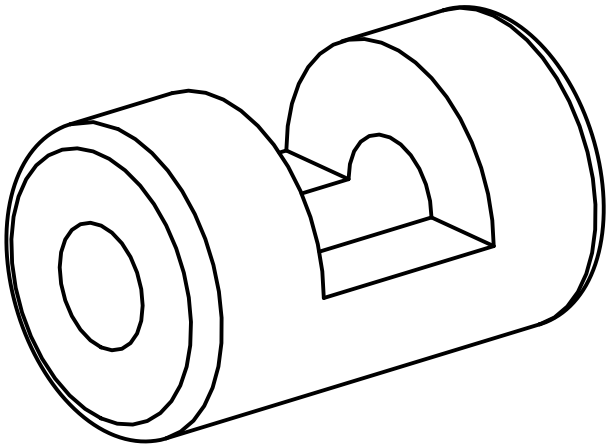

Clamping sleeve

10724630

INDEX

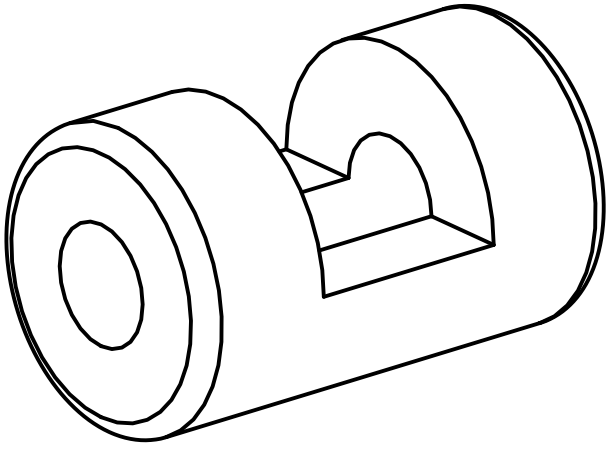

Clamping sleeve