10955373

INDEX

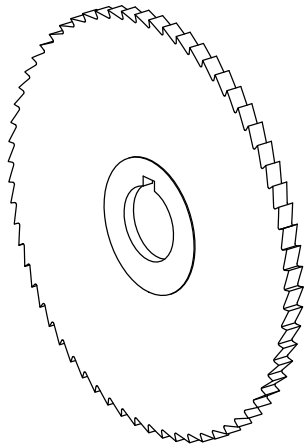

Circular saw blade d125

10955373

INDEX

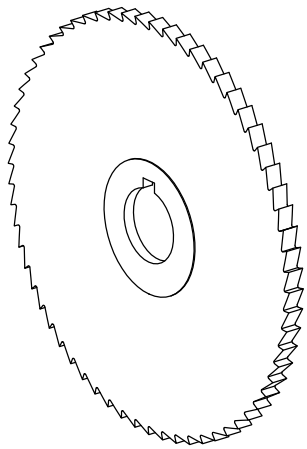

Circular saw blade d125