12081936

INDEX

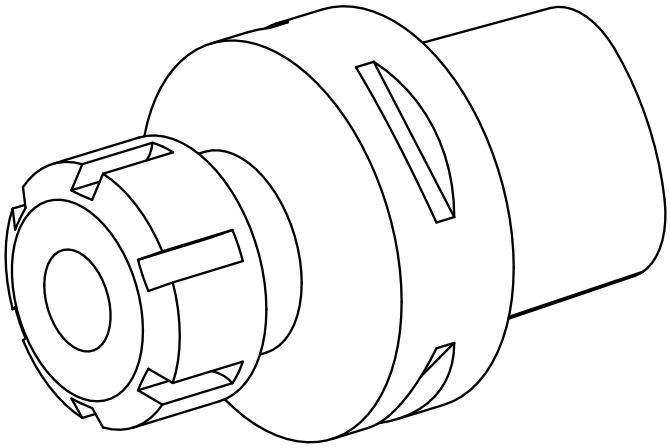

INDEX CAPTO C6

12081936

INDEX

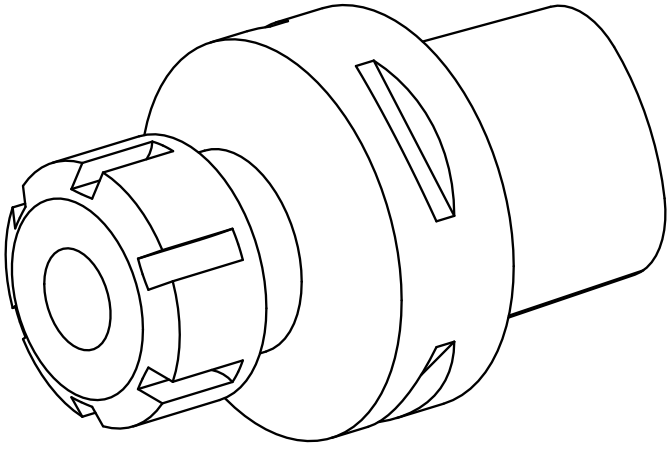

INDEX CAPTO C6