10150150

INDEX

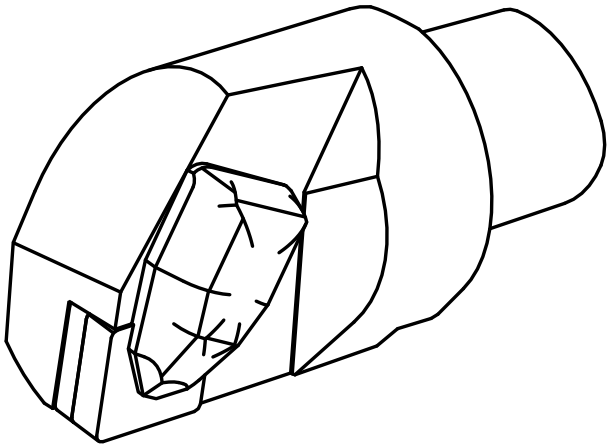

INDEX CAPTO C3

10150150

INDEX

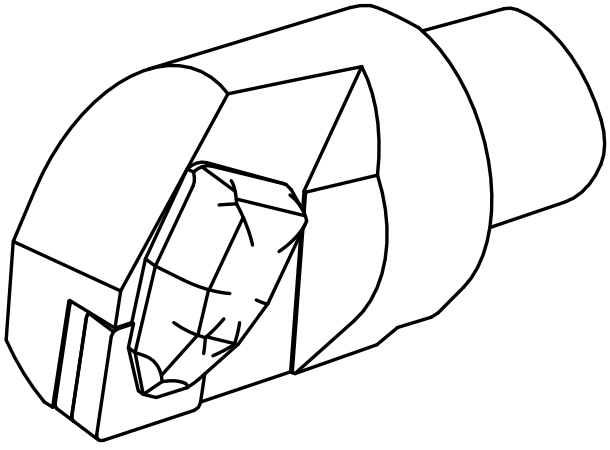

INDEX CAPTO C3