10741672

INDEX

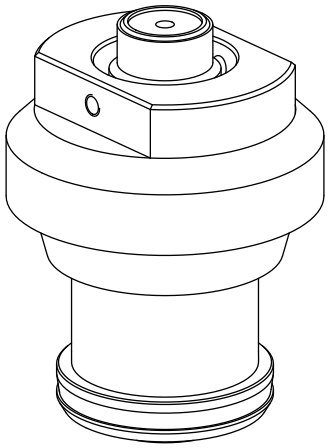

Adapter pre-adjustment block

10741672

INDEX

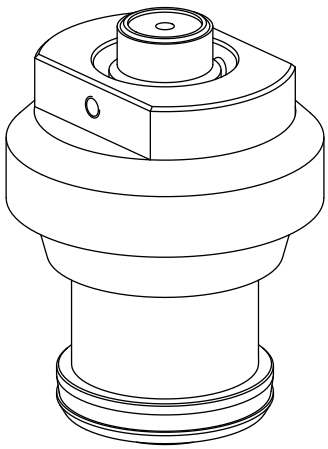

Adapter pre-adjustment block