10295079

INDEX

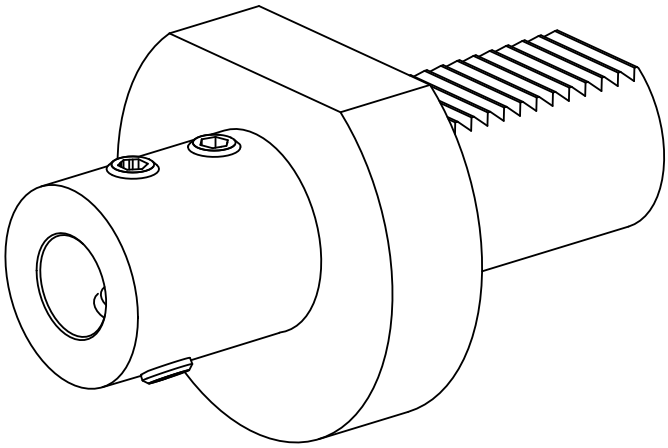

VDI 40

10295079

INDEX

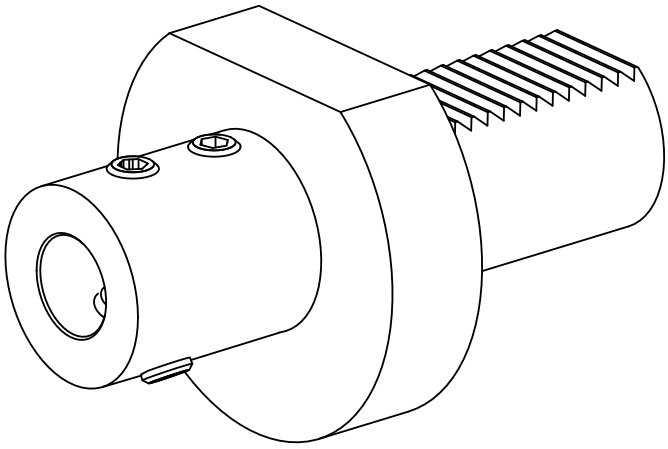

VDI 40