# 10004799

# INDEX

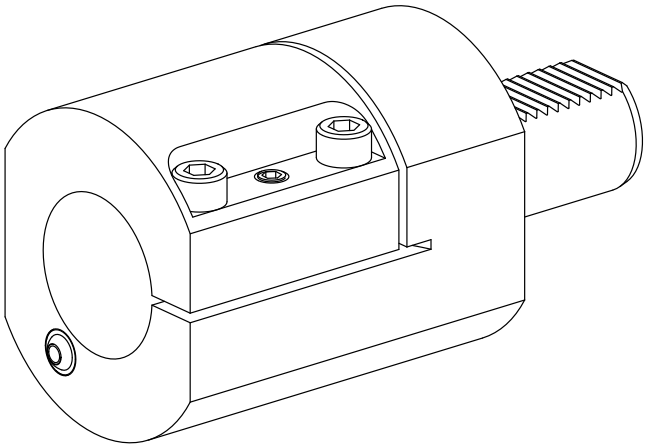

**VDI 40**


# 10004799

# INDEX


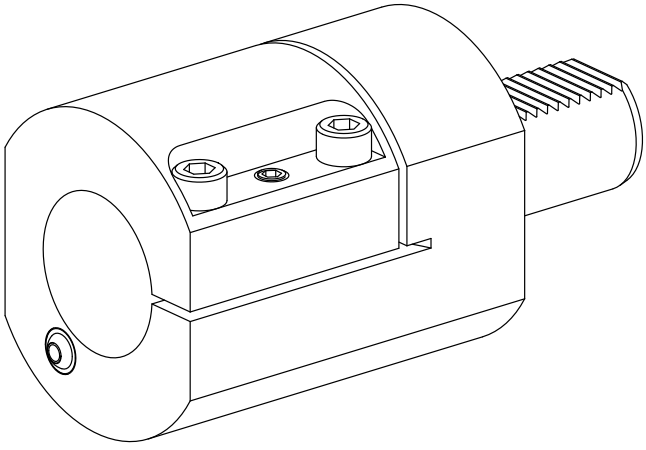


**VDI 40**