10046170

INDEX

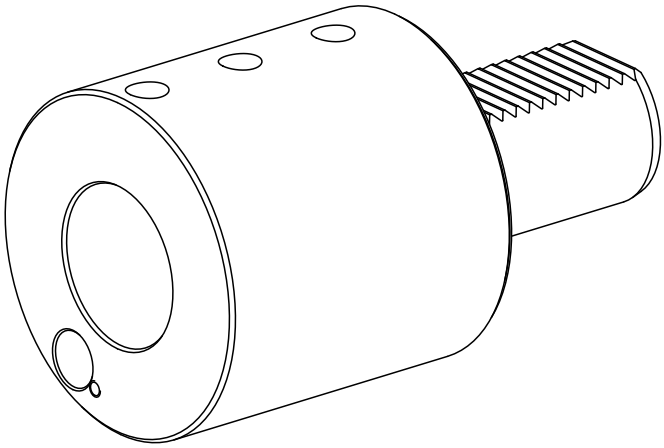

VDI 40

10046170

INDEX

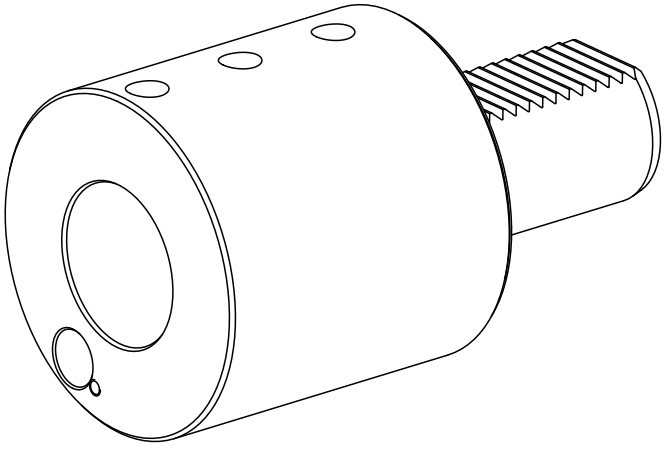

VDI 40