10655688

INDEX

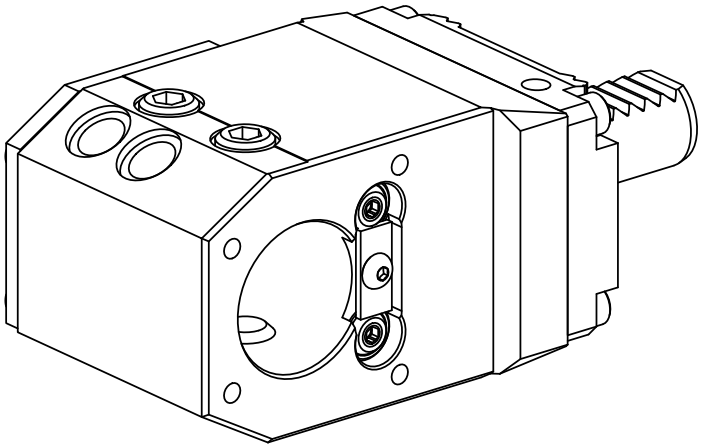

VDI 20

10655688

INDEX

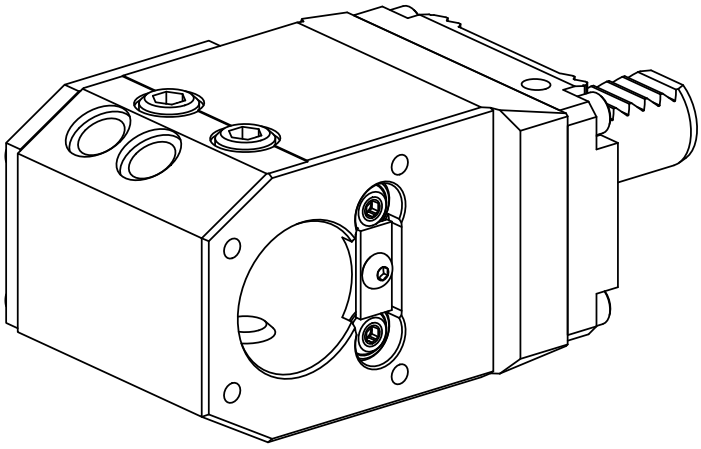

VDI 20