10884174

INDEX

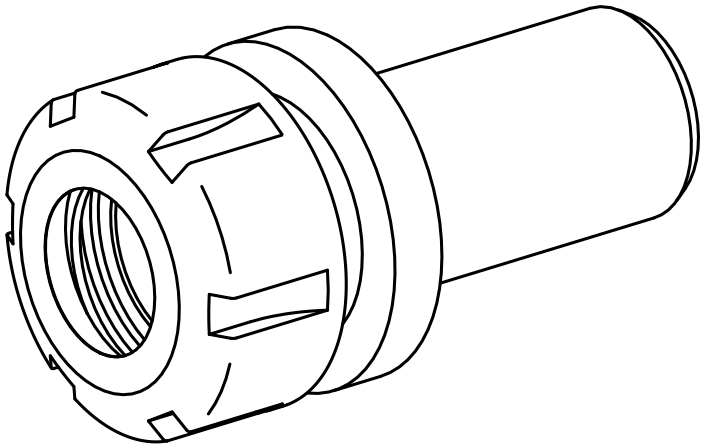

1"

10884174

INDEX

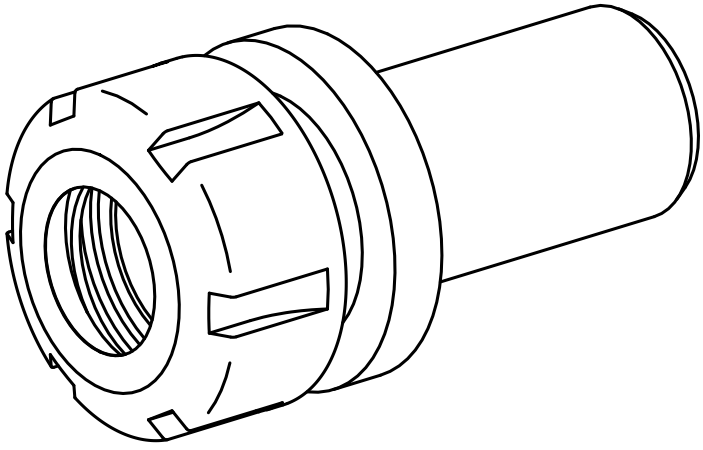

1"