10854854

INDEX

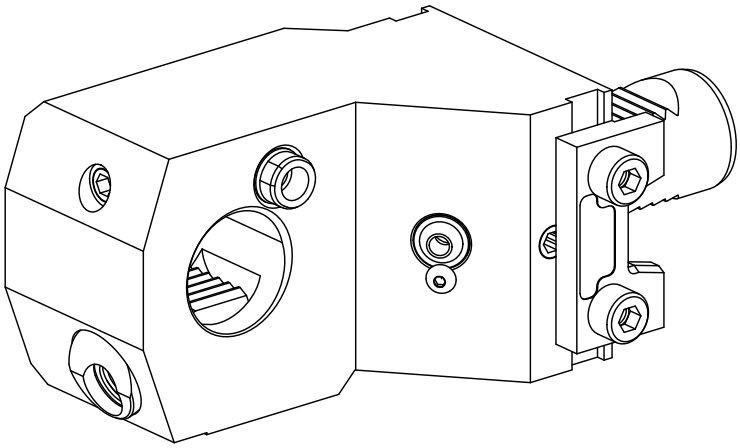

VDI 30

10854854

INDEX

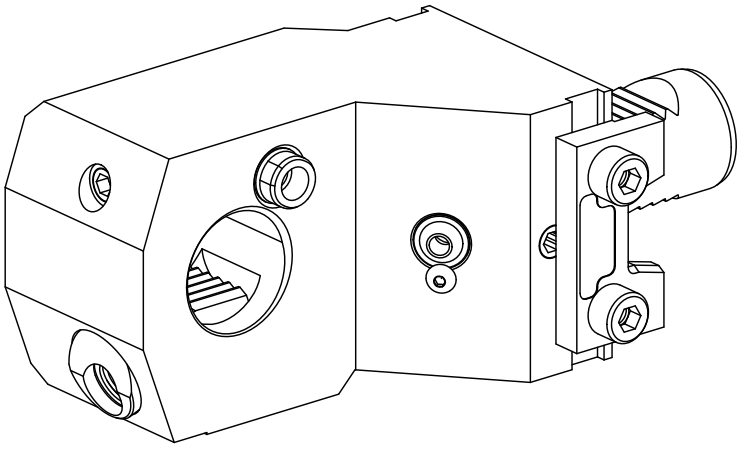

VDI 30