12149680

INDEX

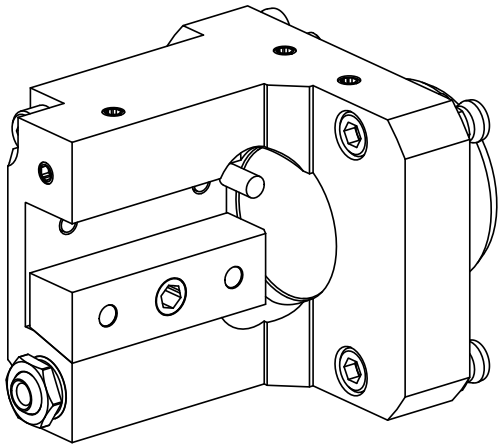

KPS 45

12149680

INDEX

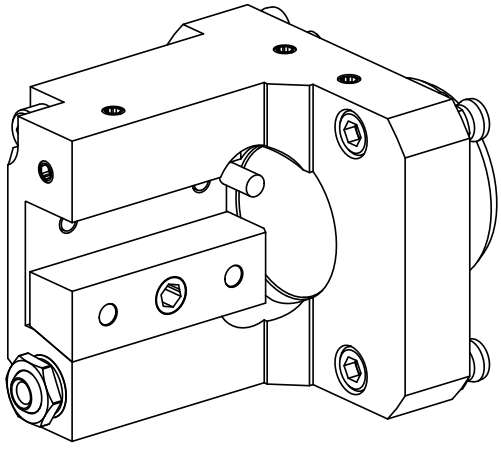

KPS 45