10846890

INDEX

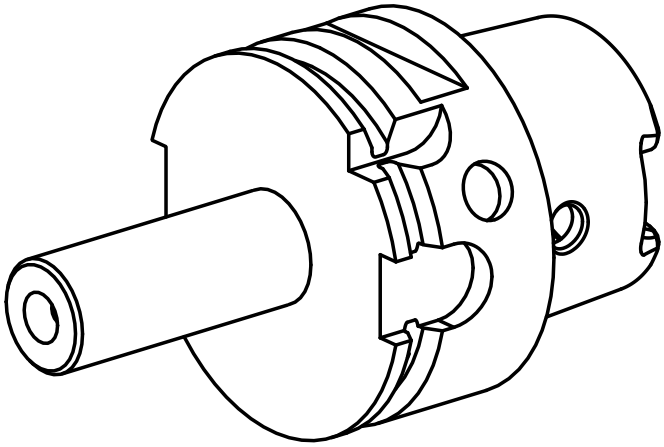

HSK 40

10846890

INDEX

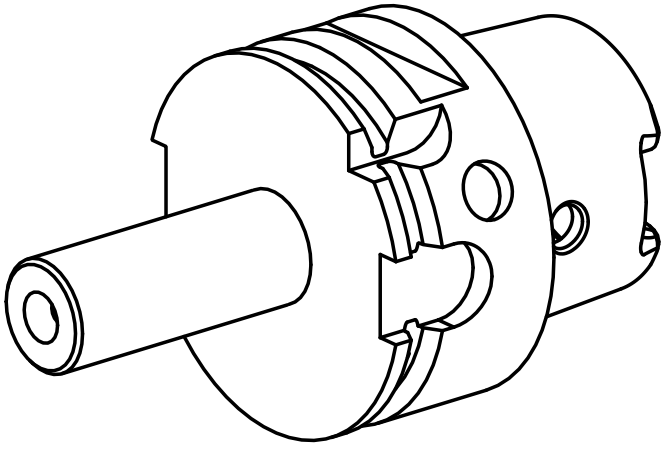

HSK 40