10044398

INDEX

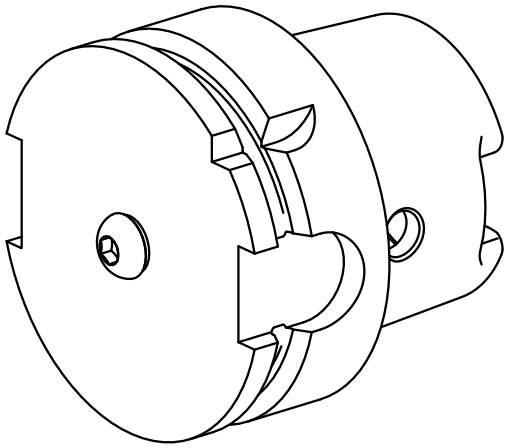

HSK 63

10044398

INDEX

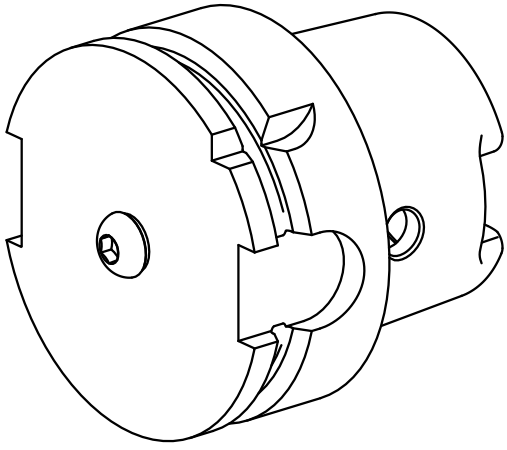

HSK 63