10944718

INDEX

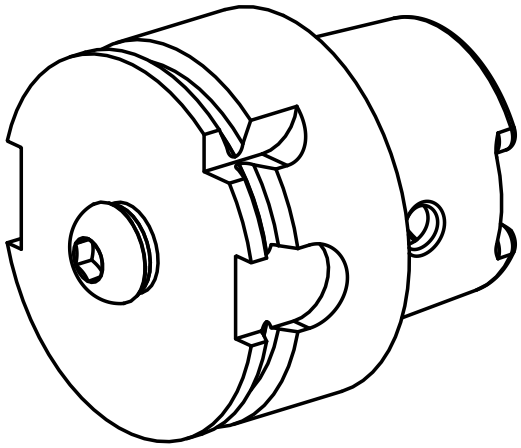

HSK 40

10944718

INDEX

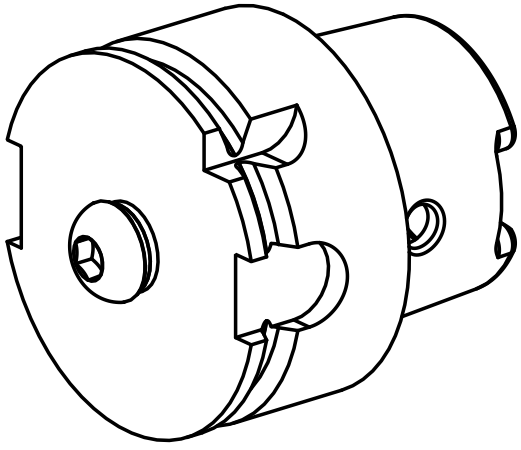

HSK 40