10466122

INDEX

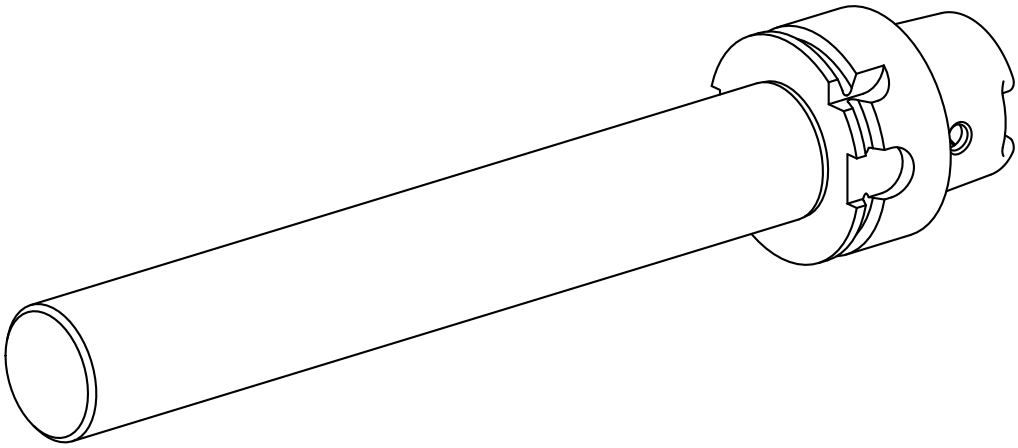

HSK 40

10466122

INDEX

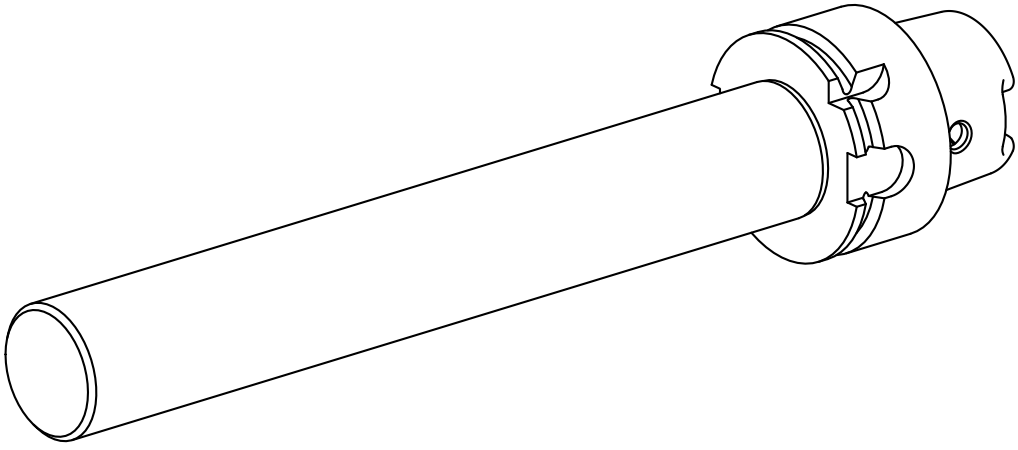

HSK 40