10183544

INDEX

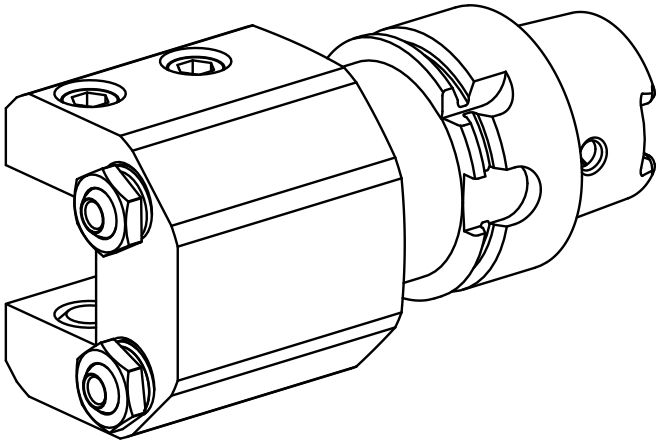

HSK 40

10183544

INDEX

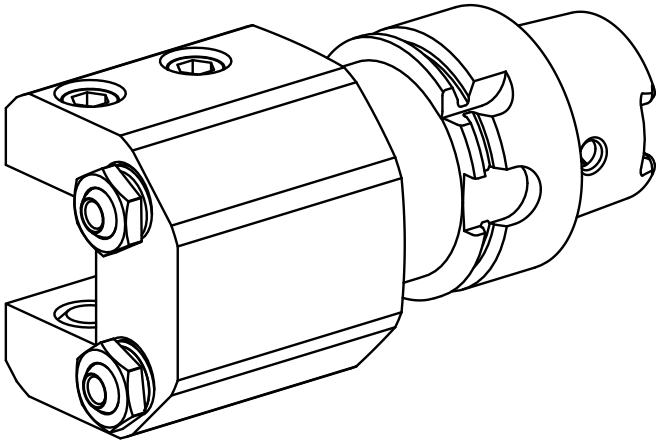

HSK 40