10407049

INDEX

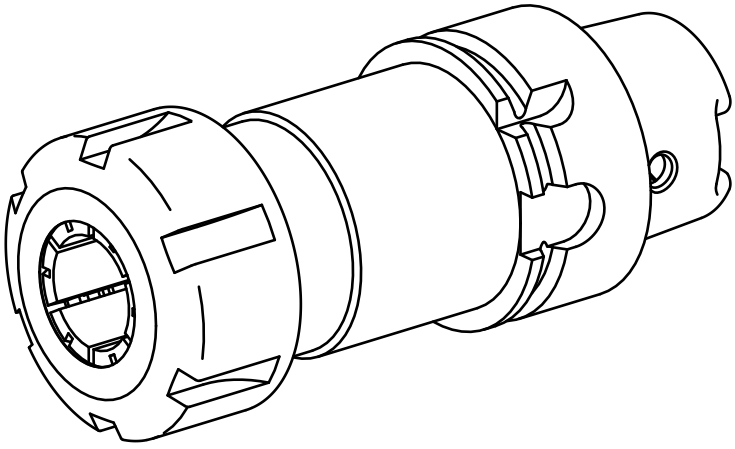

HSK 40

10407049

INDEX

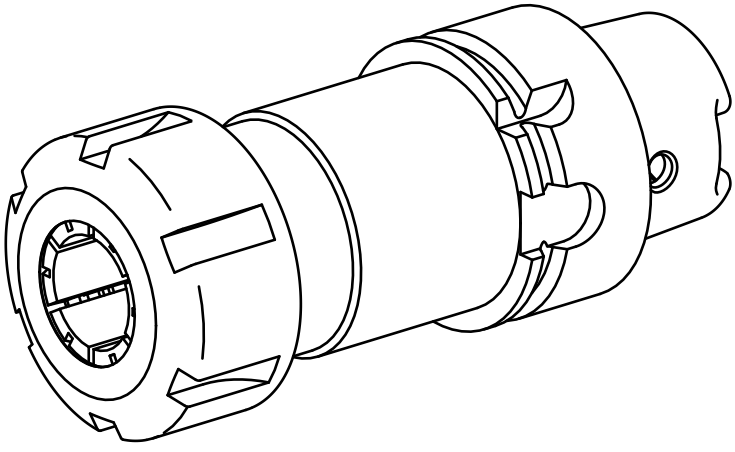

HSK 40