10614493

INDEX

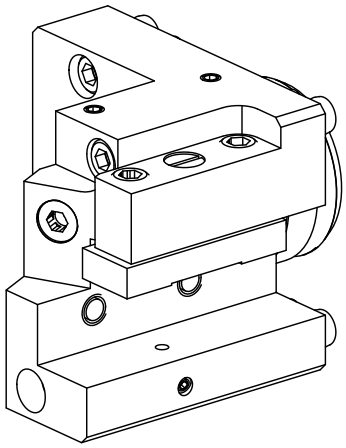

KPS 45

10614493

INDEX

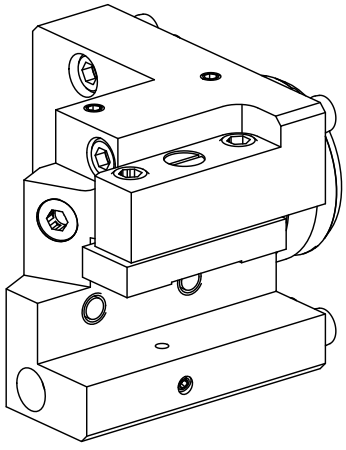

KPS 45