10691613 **INDEX**

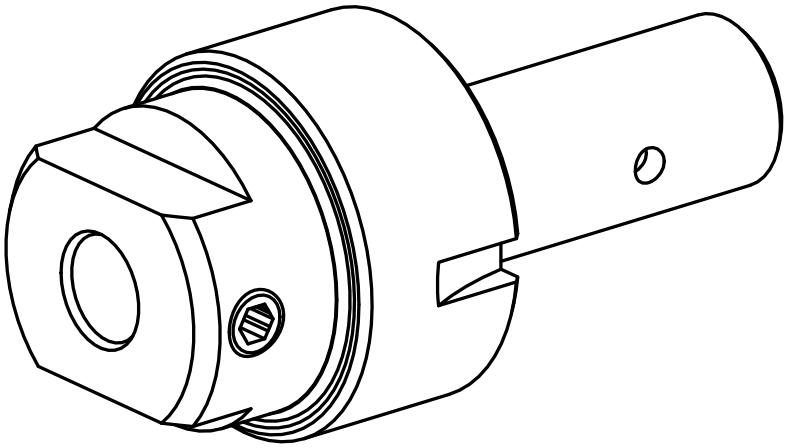

3/4"

10691613 **INDEX**

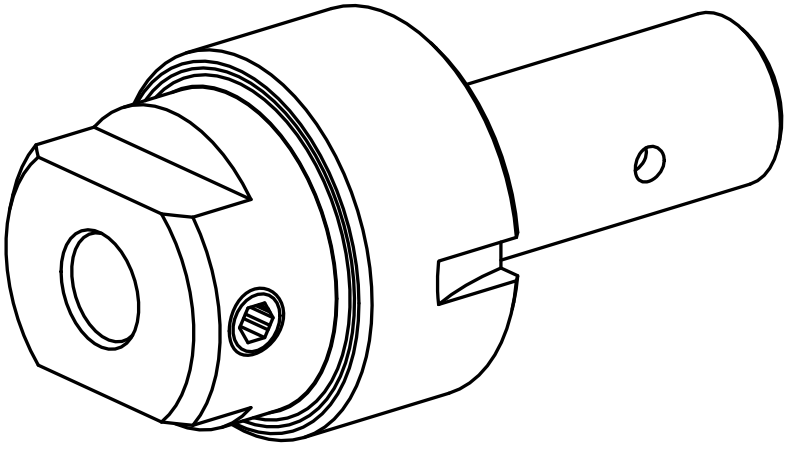

3/4"