11062082

INDEX

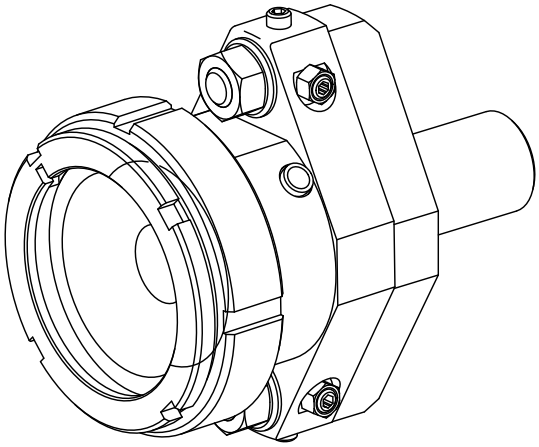

1"

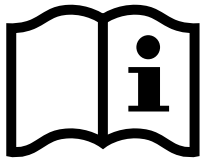

11062082

INDEX

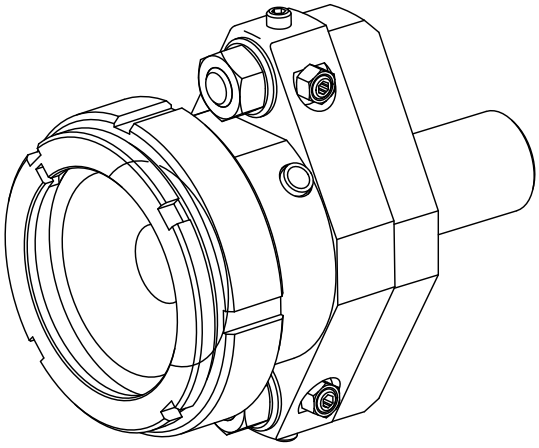
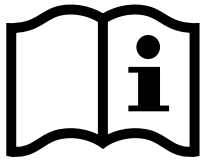
1"