10281269

INDEX

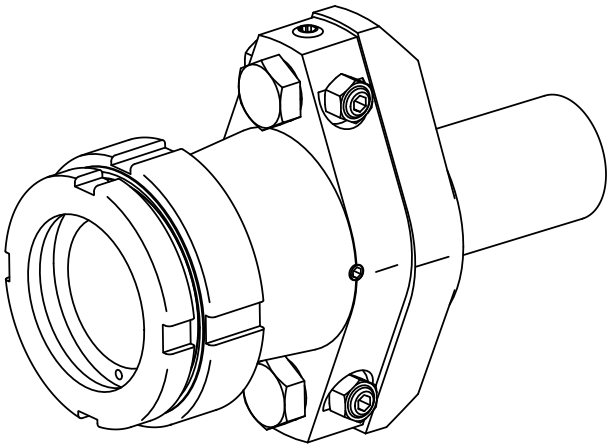

1"

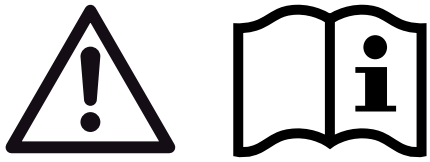

10281269

INDEX

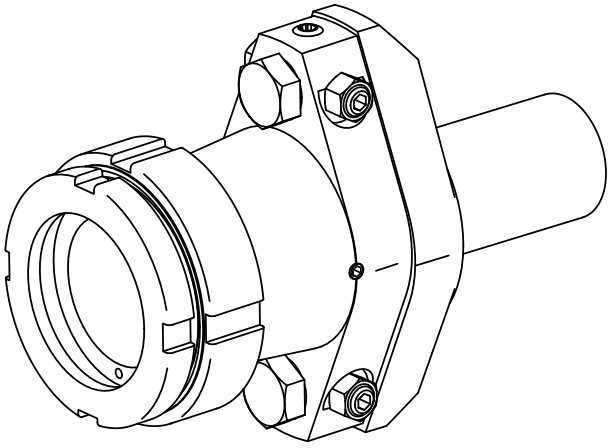
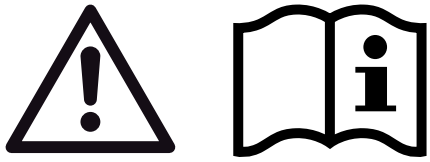
1"