10004799

INDEX

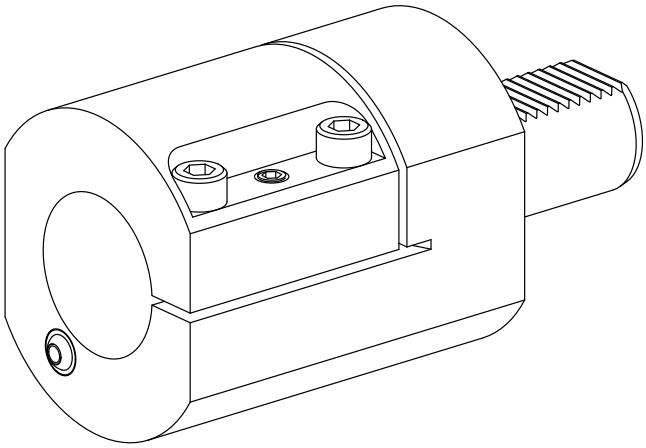

VDI 40

10004799

INDEX

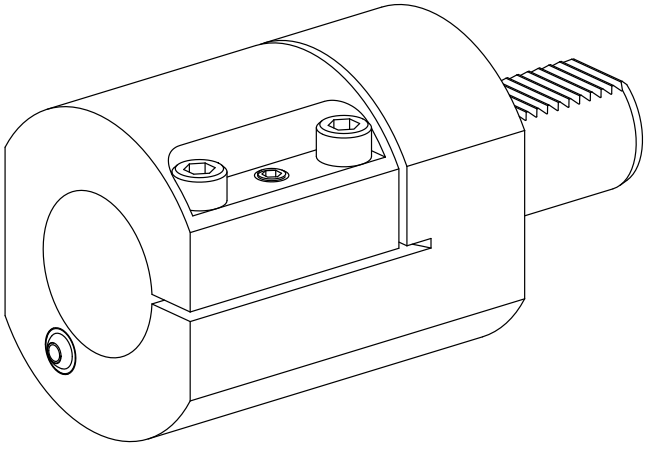

VDI 40