11043672

INDEX

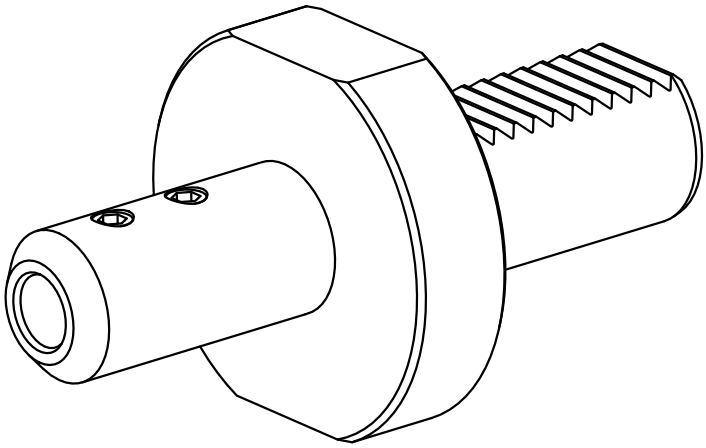

VDI 30

11043672

INDEX

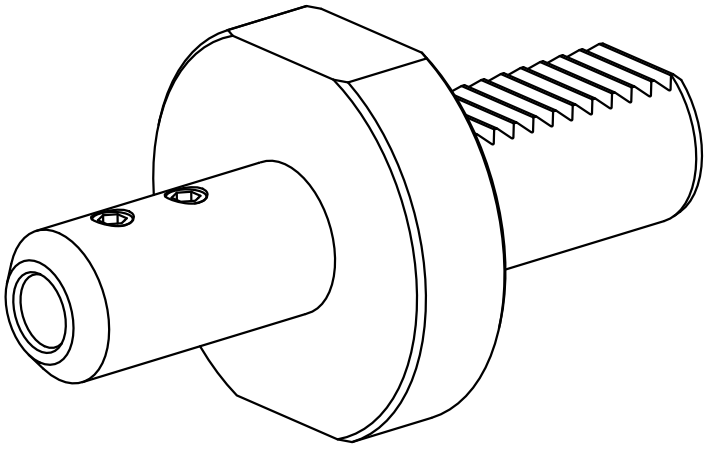

VDI 30