10949890

INDEX

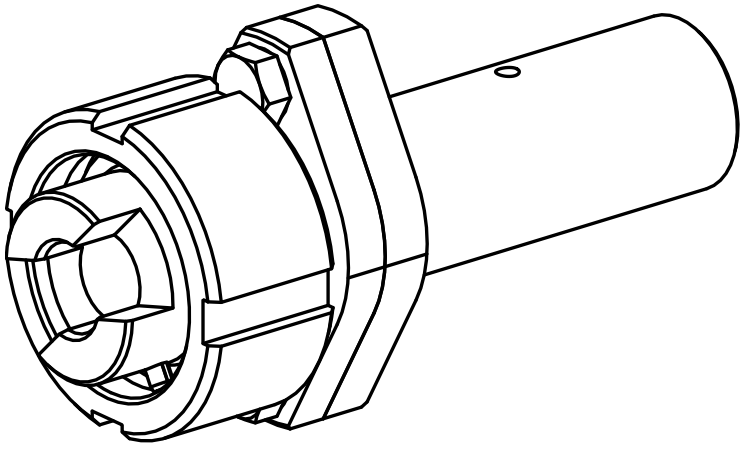

3/4"

10949890

INDEX

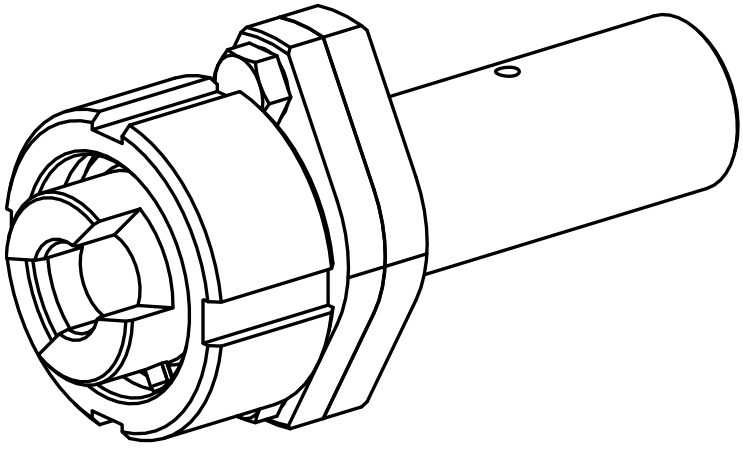

3/4"