10103977

INDEX

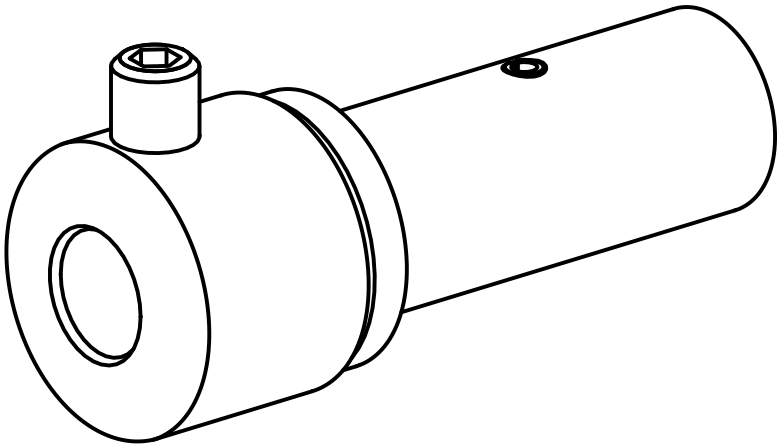

3/4"

10103977

INDEX

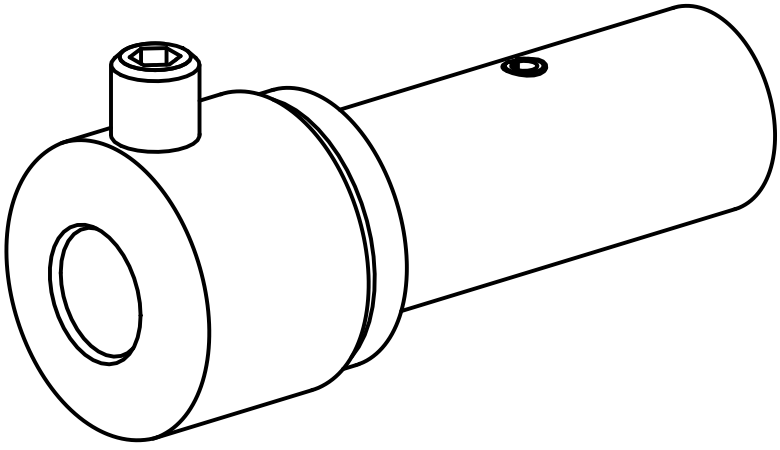

3/4"