10631262

INDEX

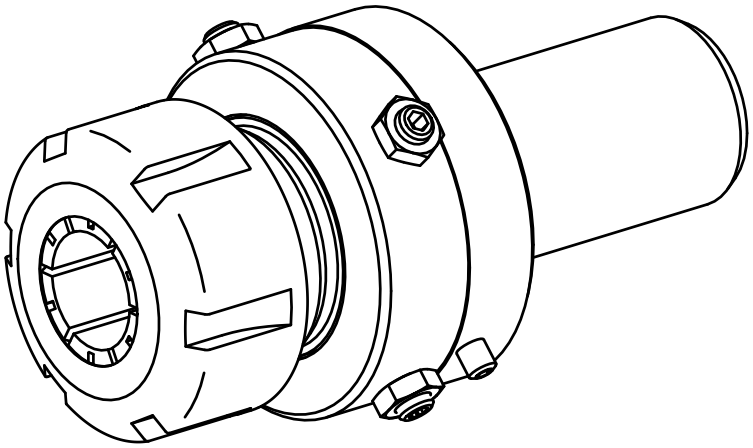

1"

10631262

INDEX

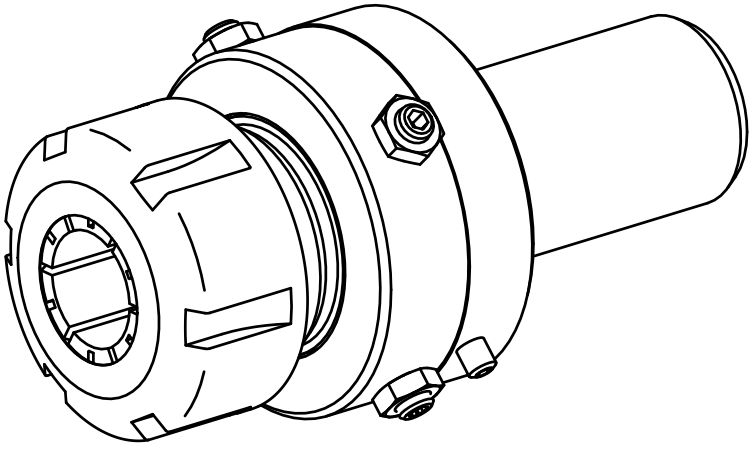

1"