11066082 **INDEX**

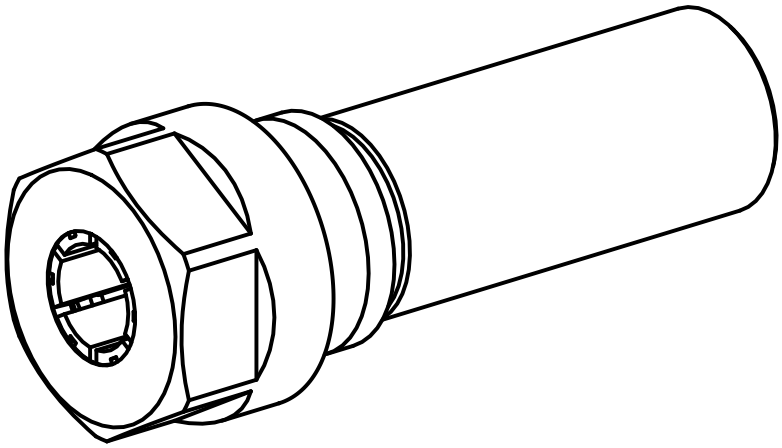

3/4"

11066082 **INDEX**

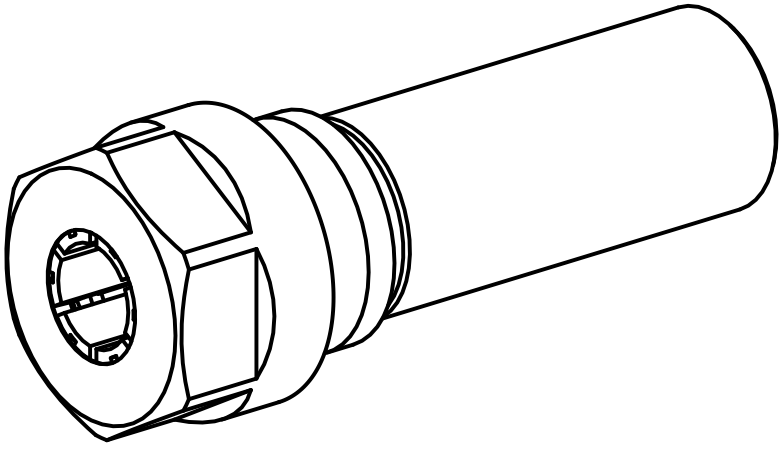

3/4"