10170595

INDEX

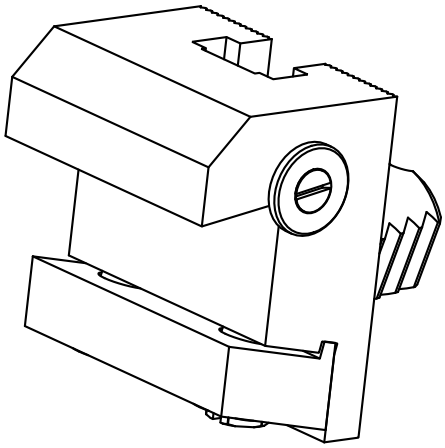

10170595
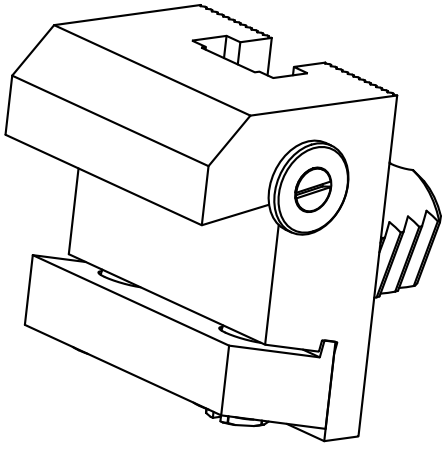
INDEX