10349388

INDEX

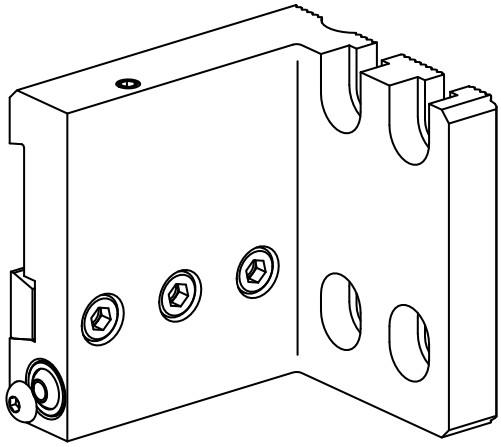

10349388
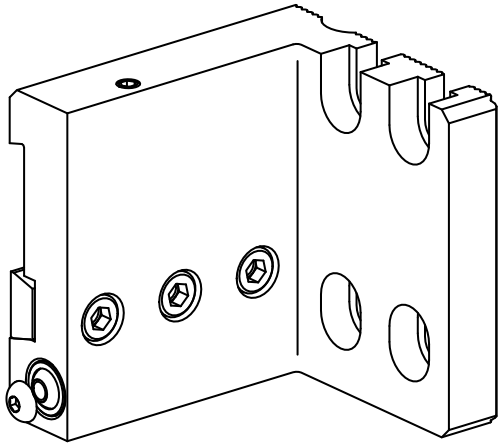
INDEX