10184218

INDEX

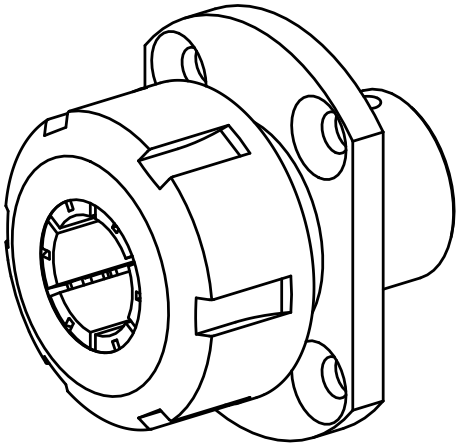

10184218
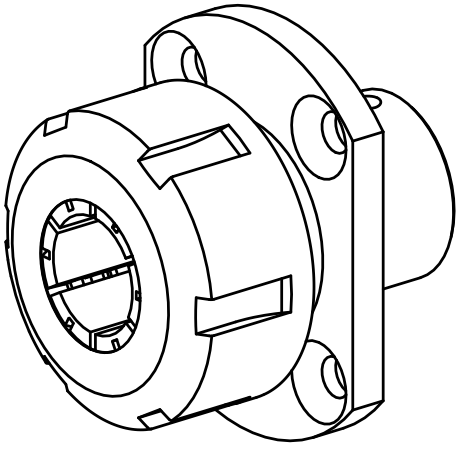
INDEX