10866327

INDEX

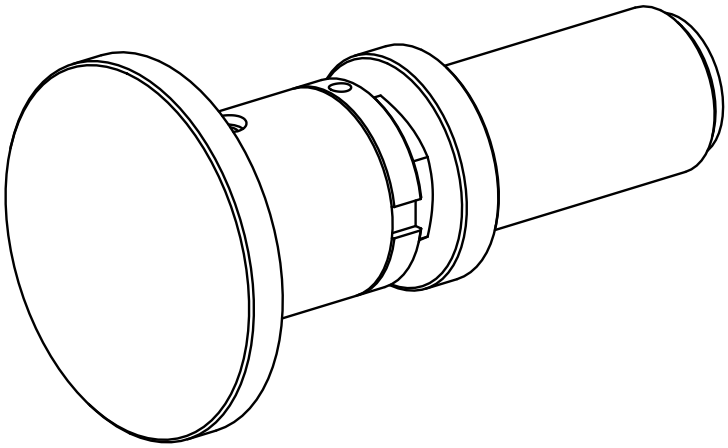

1"

10866327

INDEX

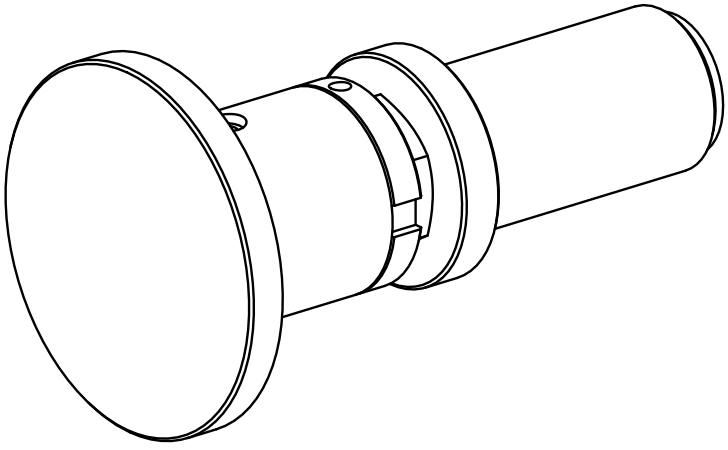

1"