# 10944270

# INDEX

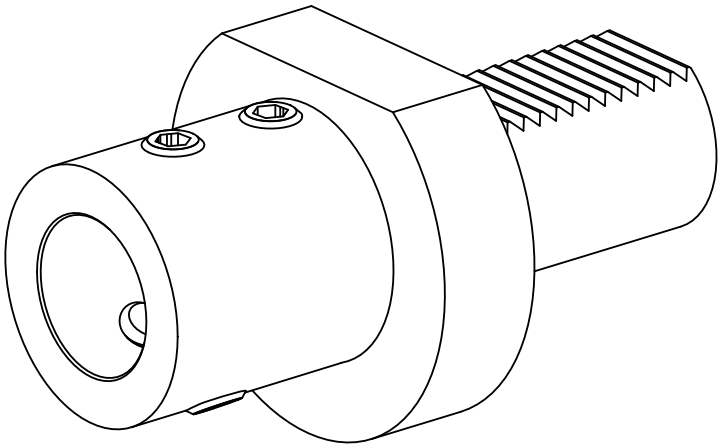

**VDI 40**


# 10944270

# INDEX


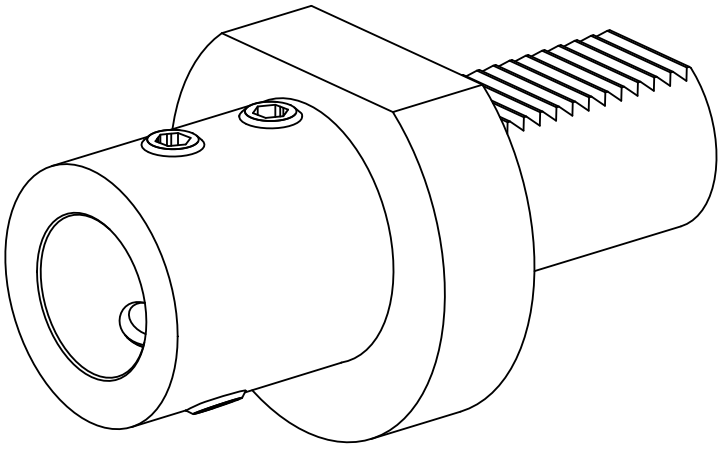


**VDI 40**