10823145

INDEX

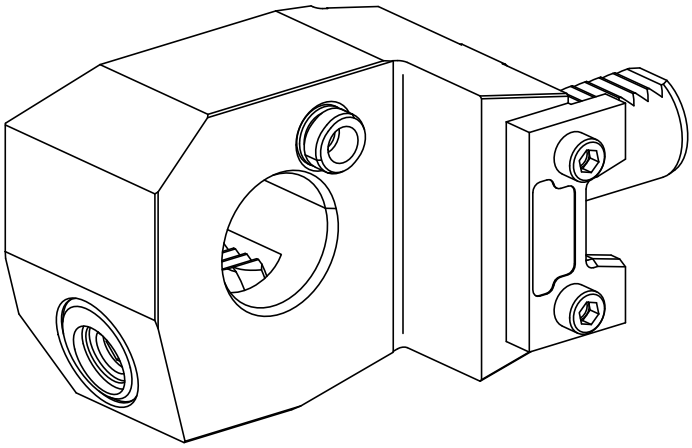

VDI 25

10823145

INDEX

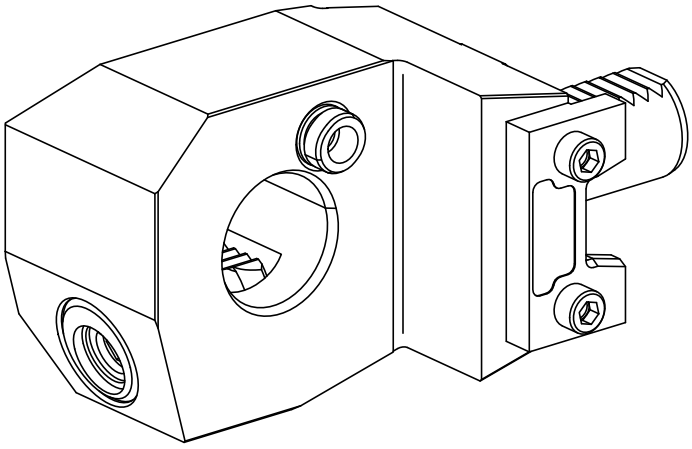

VDI 25