# 10426764

# INDEX

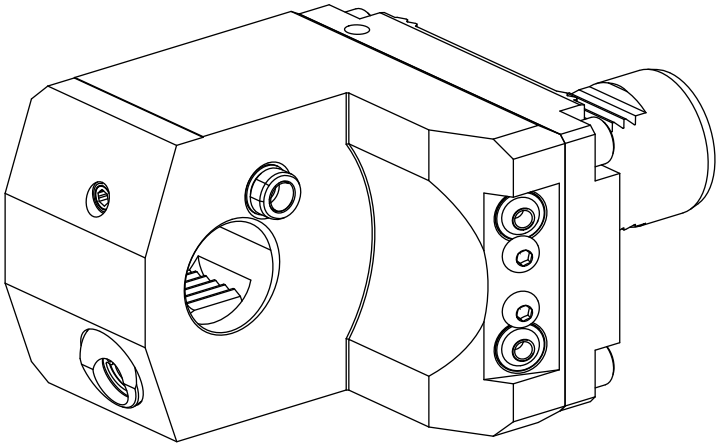

**VDI 40**


# 10426764

# INDEX


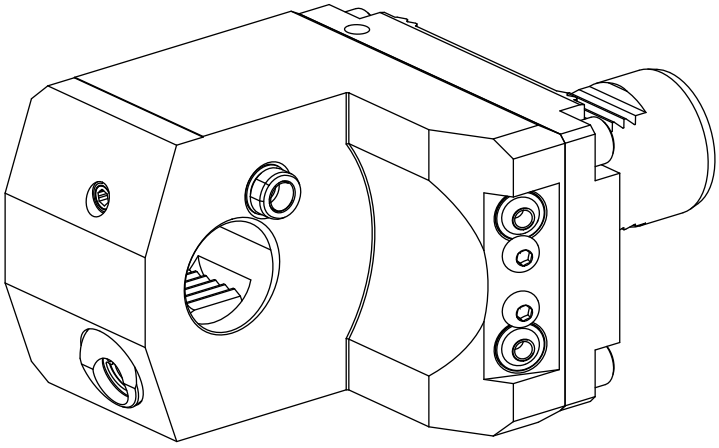


**VDI 40**