10886503 **INDEX**

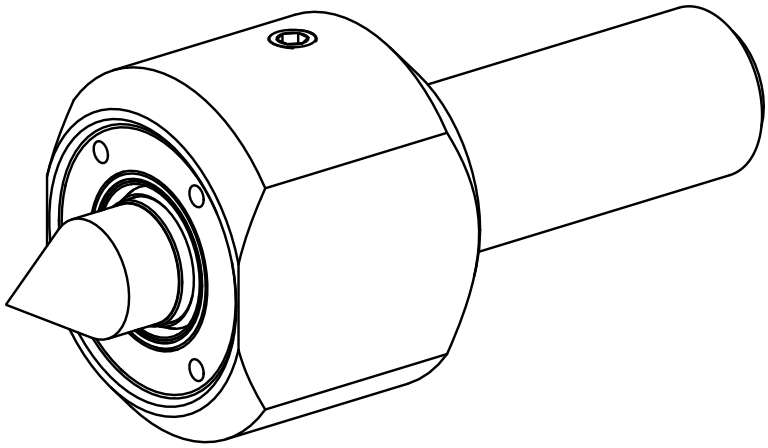

1"

10886503 **INDEX**

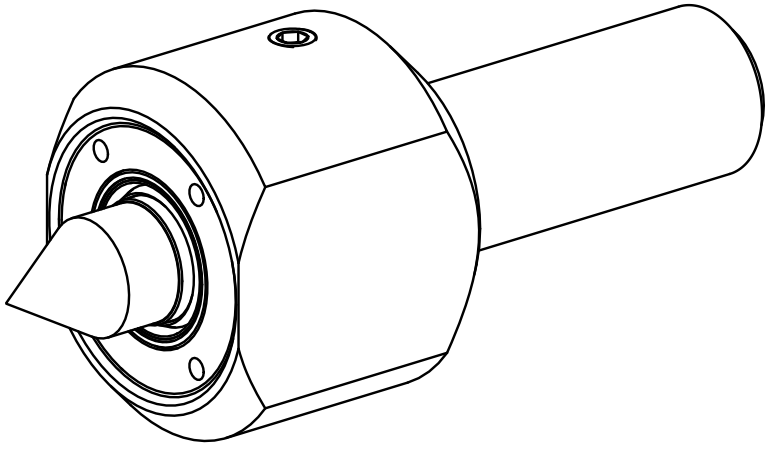

1"