10913831

INDEX

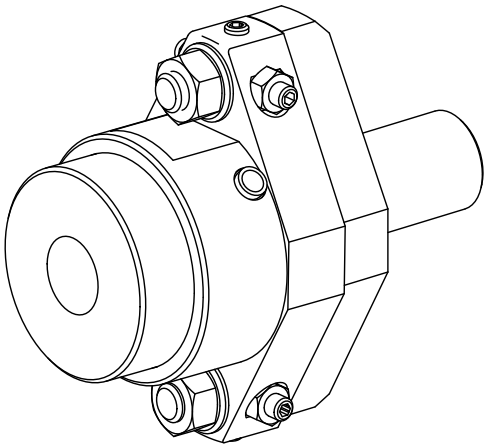

1"

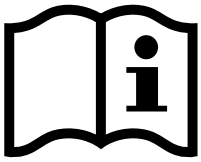

10913831

INDEX

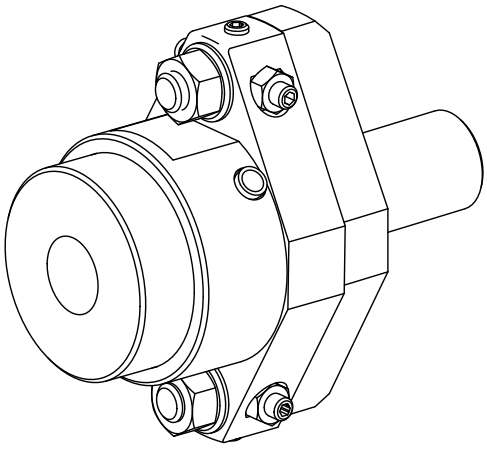
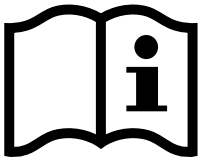
1"