10217247

INDEX

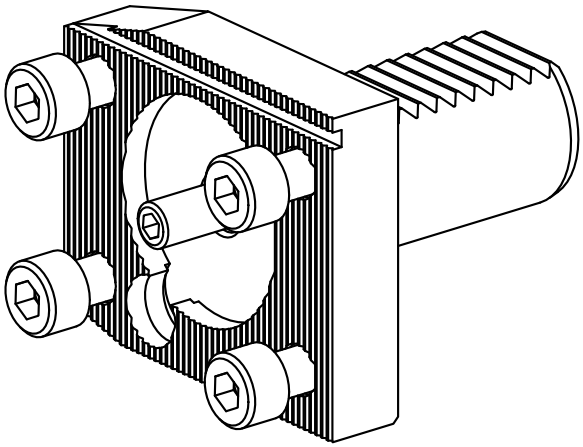

VDI 30

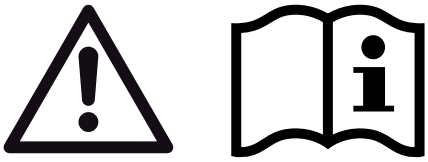

10217247

INDEX

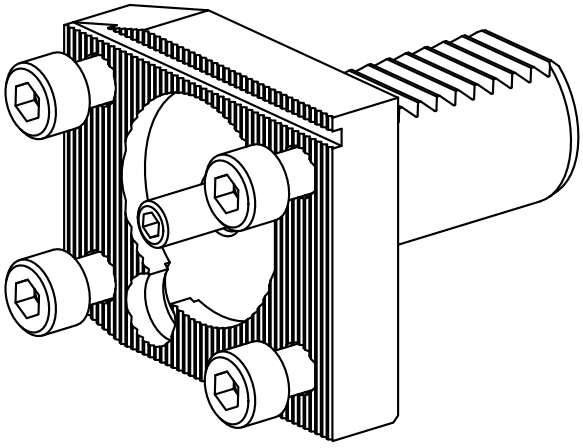
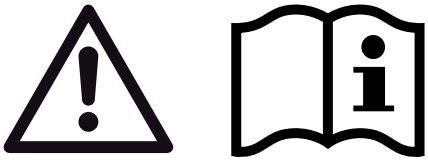
VDI 30