# 10184218

# INDEX

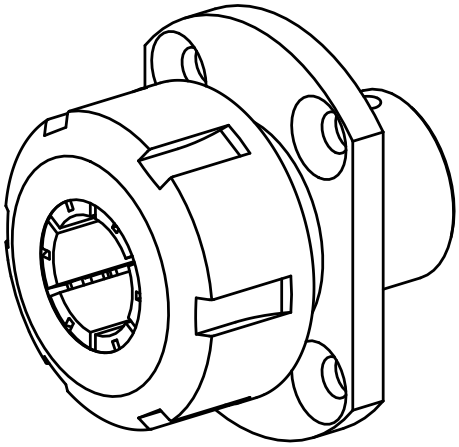

10184218
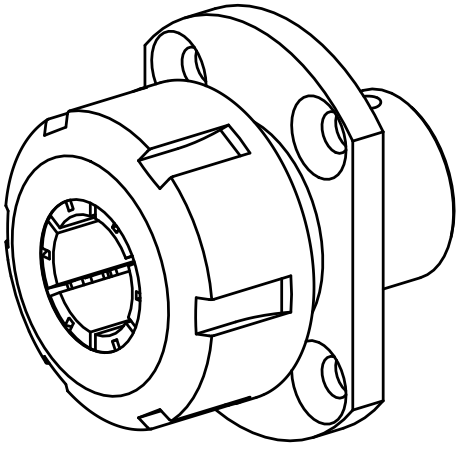
INDEX