10773801

INDEX

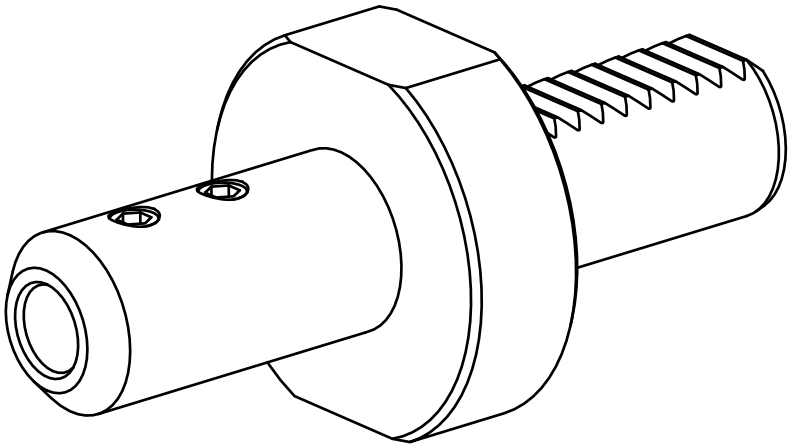

VDI 25

10773801

INDEX

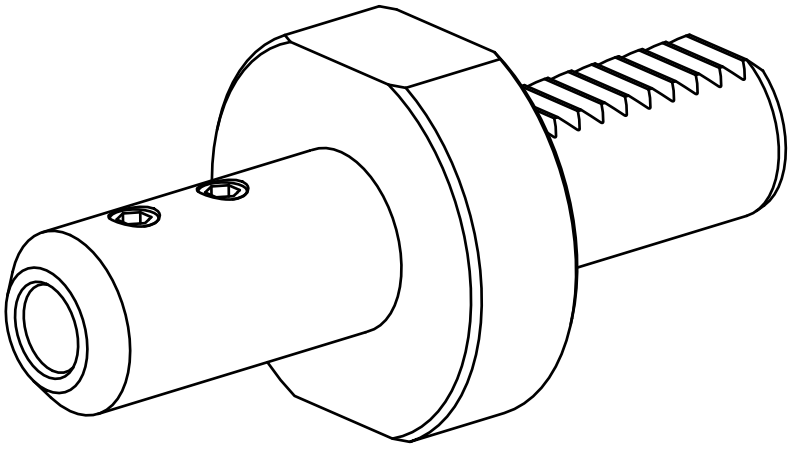

VDI 25