**10631335**

# INDEX

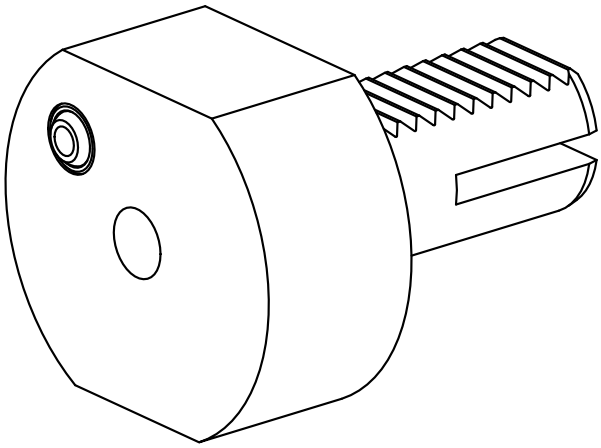

**VDI 30**

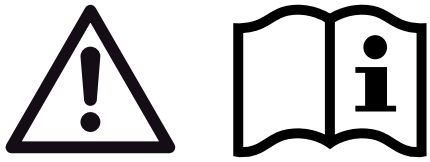

**10631335**

# INDEX

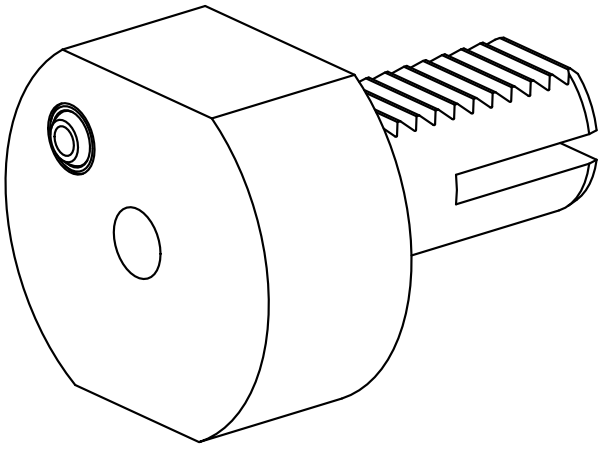
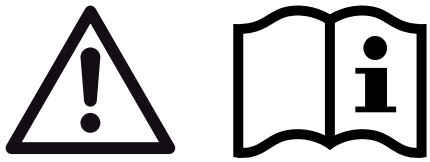
**VDI 30**