# 10983815

# INDEX

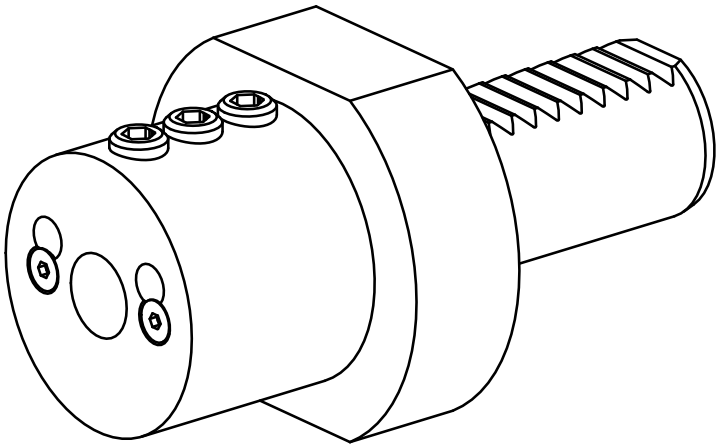

**VDI 25**


# 10983815

# INDEX


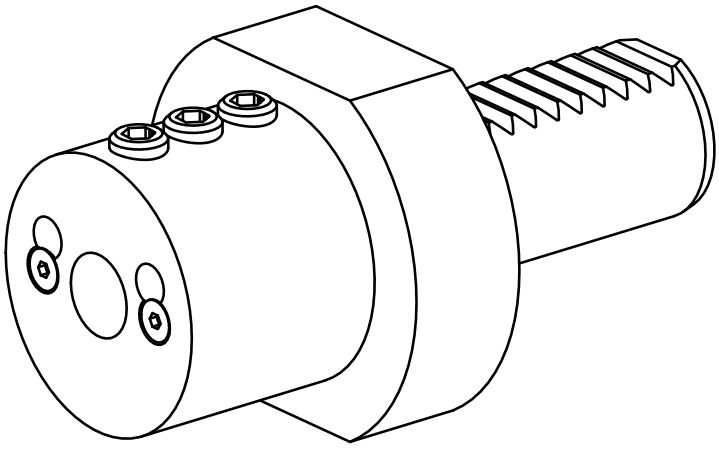


**VDI 25**