10503585 **INDEX**

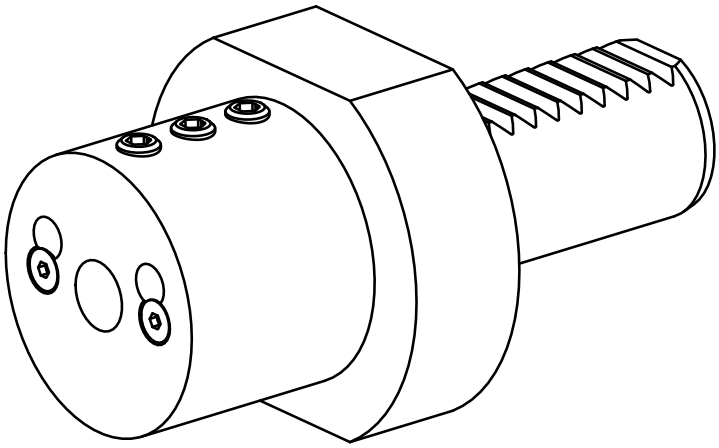

VDI 25

10503585 **INDEX**

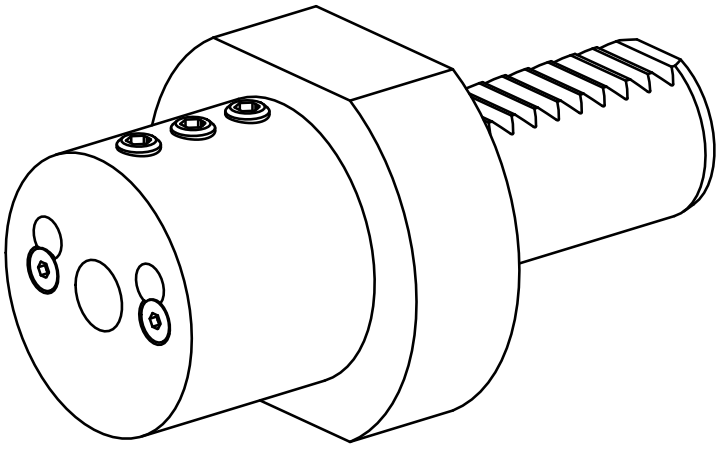

VDI 25