10036301 **INDEX**

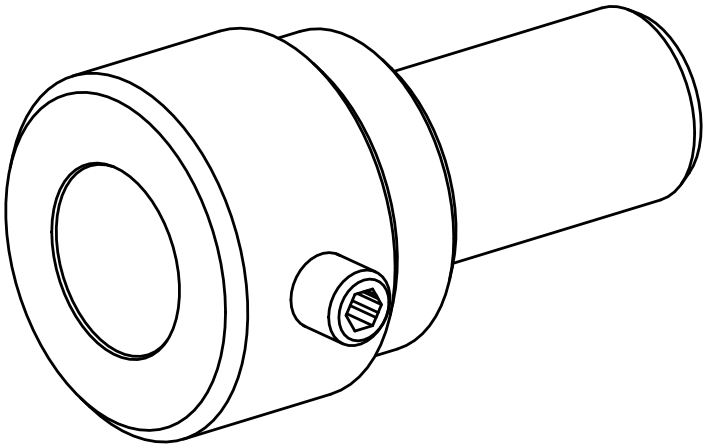

1"

10036301 **INDEX**

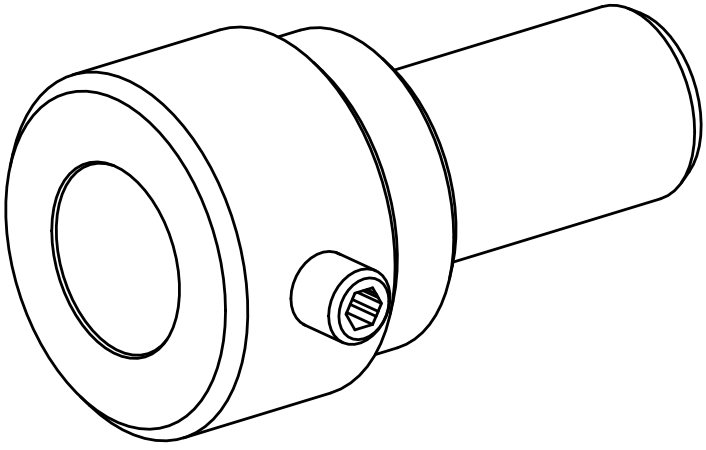

1"