10148392 **INDEX**

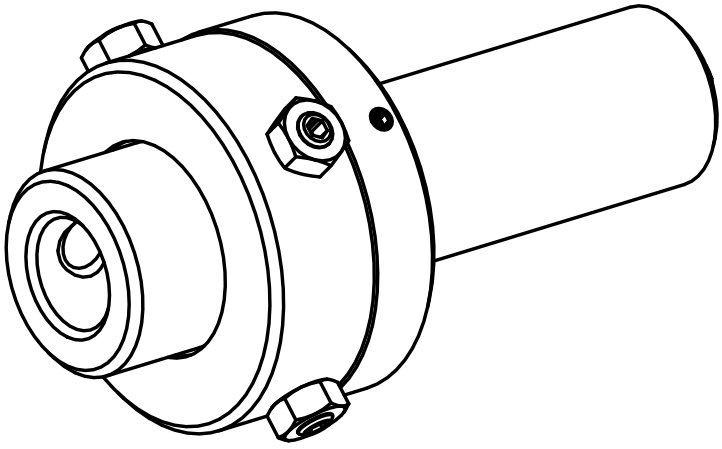

3/4"

10148392 **INDEX**

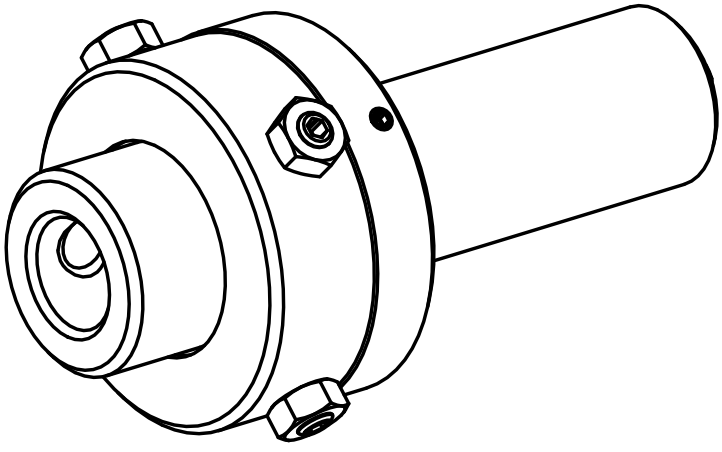

3/4"