10448325 **INDEX**

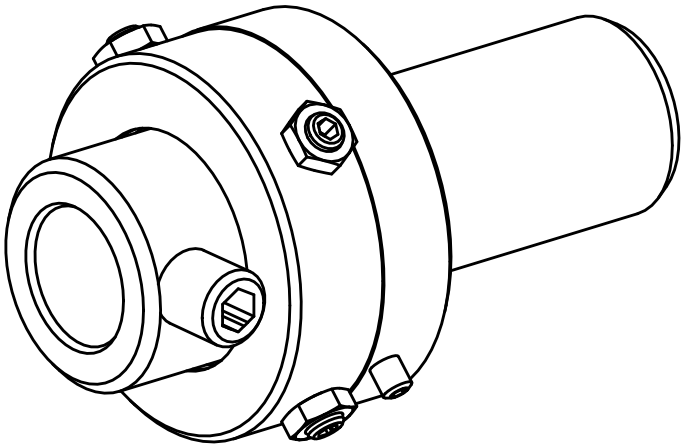

1"

10448325 **INDEX**

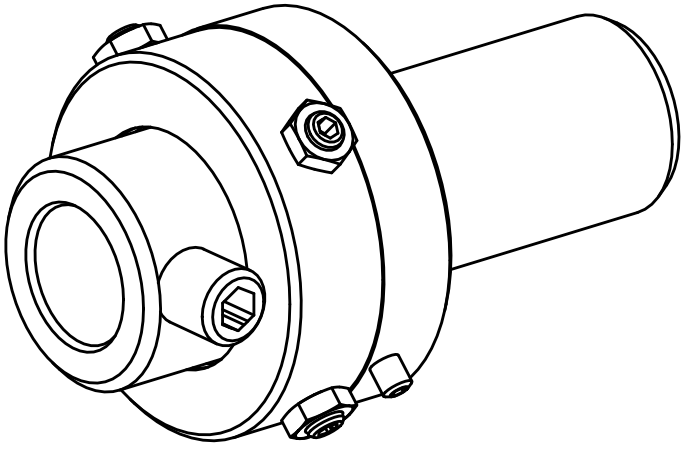

1"