11041774

INDEX

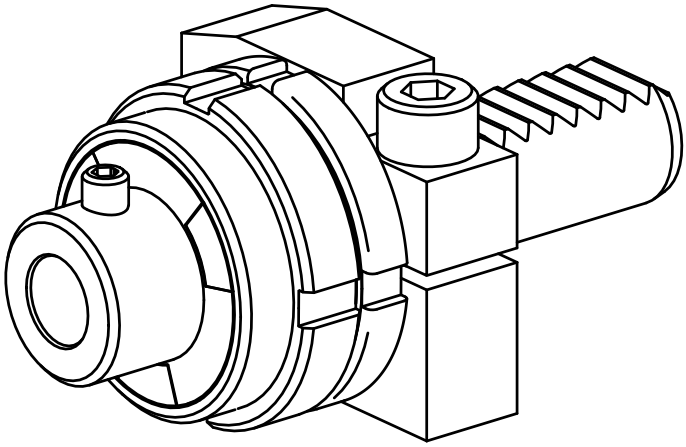

VDI 20

11041774

INDEX

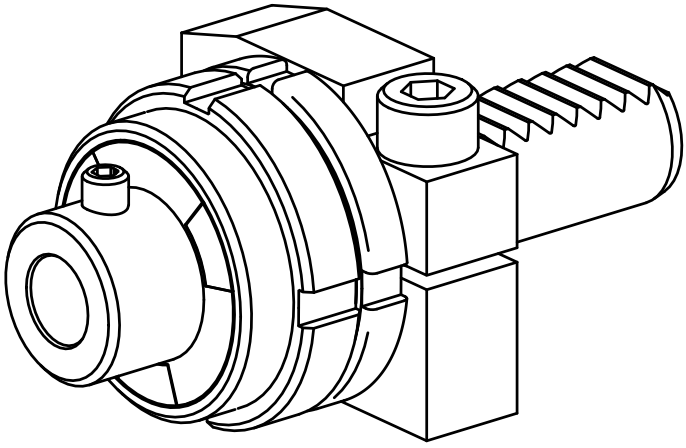

VDI 20