10114544 **INDEX**

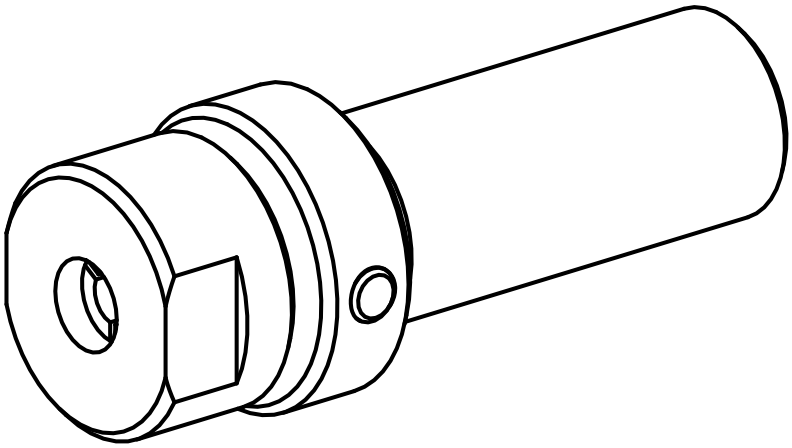

3/4"

10114544 **INDEX**

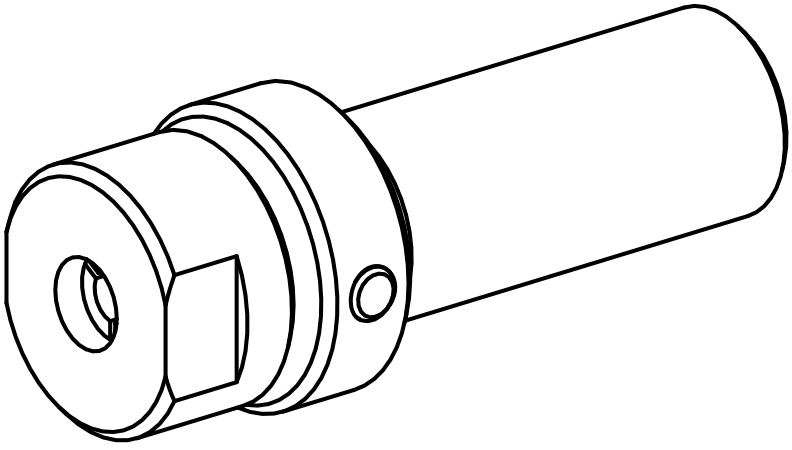

3/4"