10628055 **INDEX**

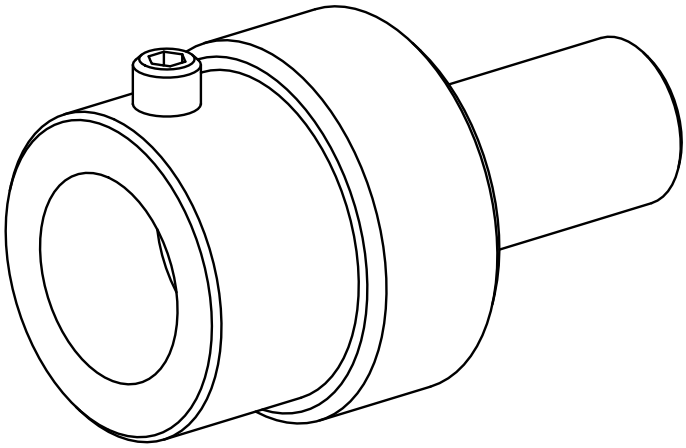

1"

10628055 **INDEX**

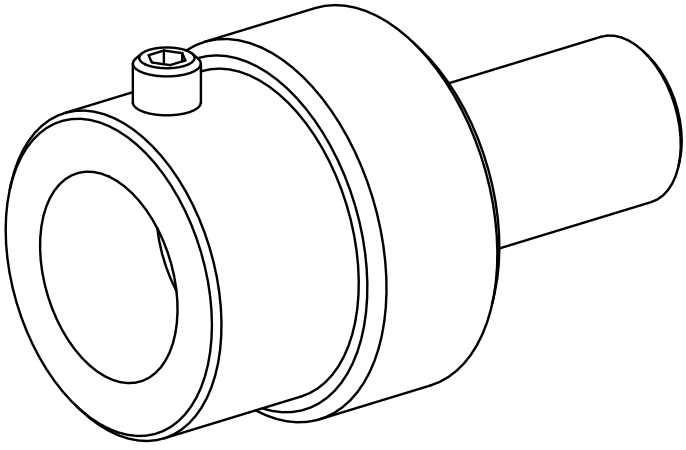

1"